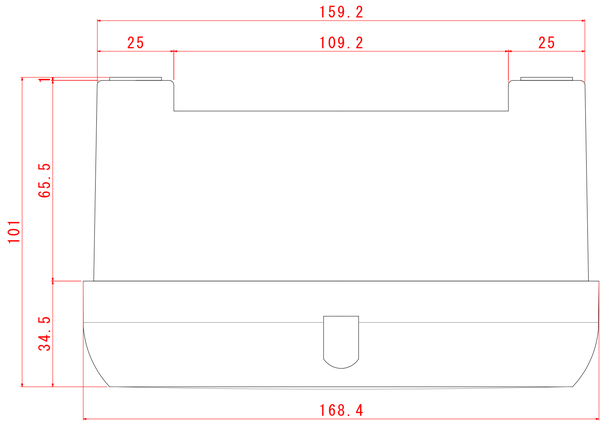
159.2
25
109.2
25
101
65.5
34.5
168.4

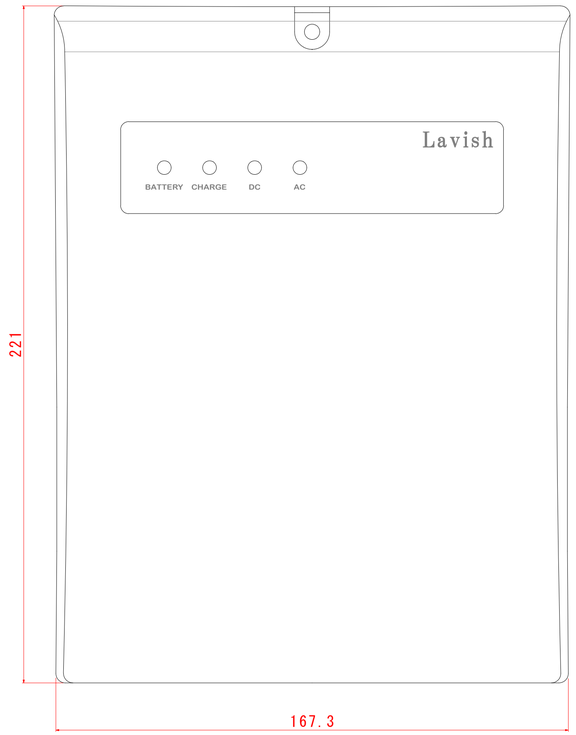
Lavish
BATTERY
CHARGE
DC
AC
221
167.3

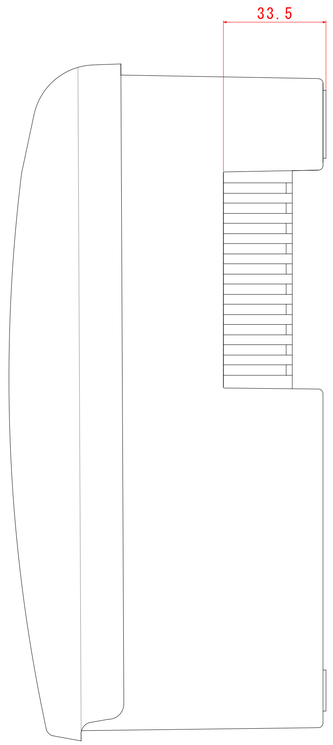
33.5

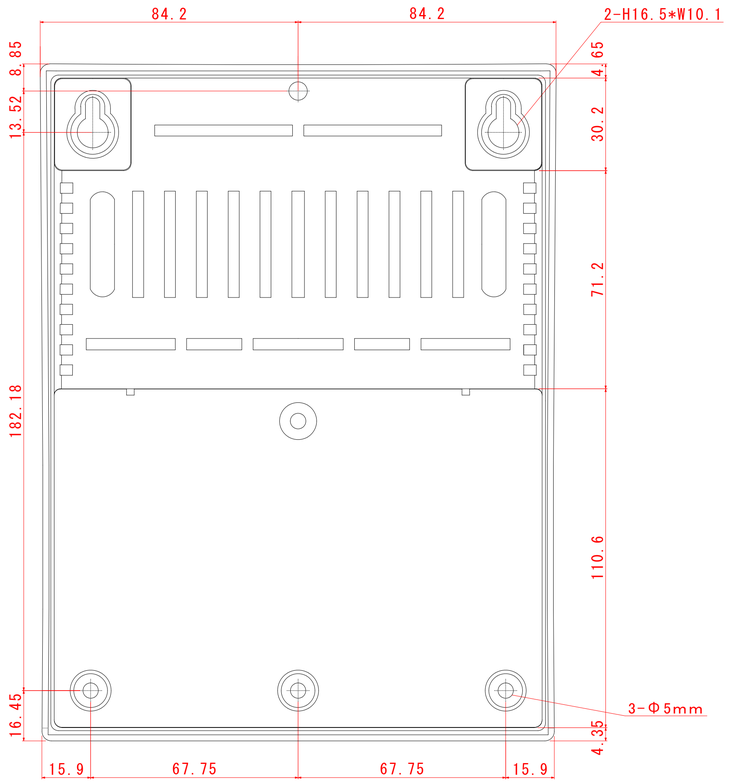
84.2
84.2
2-H16.5*W10.1
8.85
4.65
13.52
30.2
71.2
182.18
110.6
16.45
3-Φ5mm
4.35
15.9
67.75
67.75
15.9

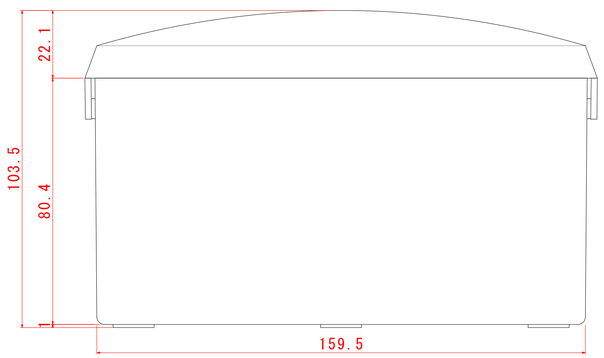
22.1
103.5
80.4
159.5